Contador Personas

- Basado en proyecto → https://github.com/cyberman54/ESP32-Paxcounter
-
```
// ----- Paxcounter user config file ------
//
// --> adapt to your needs and use case <--
//
// Note: After editing, before "build", use "clean" button in PlatformIO!
```
- LILYGO® TTGO MINI 32 V2.0 ESP32 WiFi bluetooth Module
- 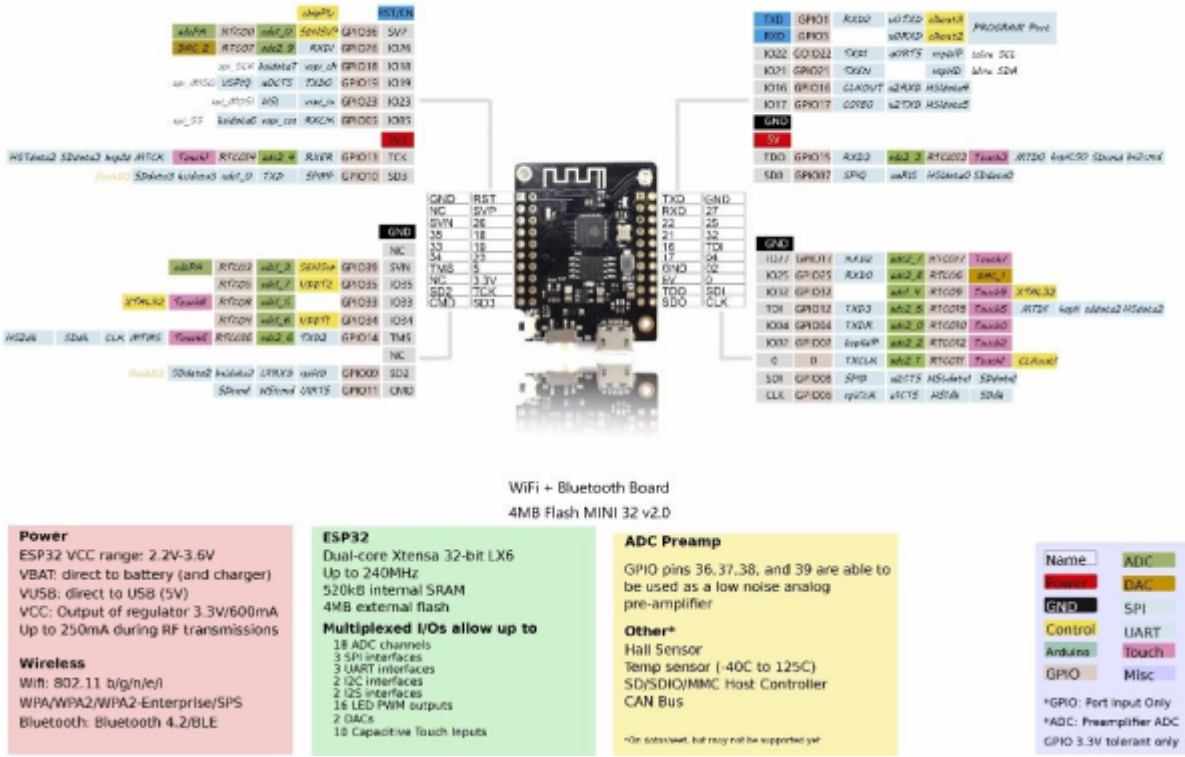

- Project issue 299: Add configurations to send data over wifi → https://github.com/cyberman54/ESP32-Paxcounter/issues/299
- Project issue 331: Running the program on a simple ESP32 board (without Lora) → https://github.com/cyberman54/ESP32-Paxcounter/issues/331

From:
https://wiki.unloquer.org/ -

Permanent link:
https://wiki.unloquer.org/personas/brolin/proyectos/contador_personas?rev=1594506426

Last update: **2020/07/11 22:27**