Contador Personas

- Basado en proyecto → https://github.com/cyberman54/ESP32-Paxcounter
-
```
// ----- Paxcounter user config file ------
//
// --> adapt to your needs and use case <--
//
// Note: After editing, before "build", use "clean" button in PlatformIO!
```
- LILYGO® TTGO MINI 32 V2.0 ESP32 WiFi bluetooth Module
- 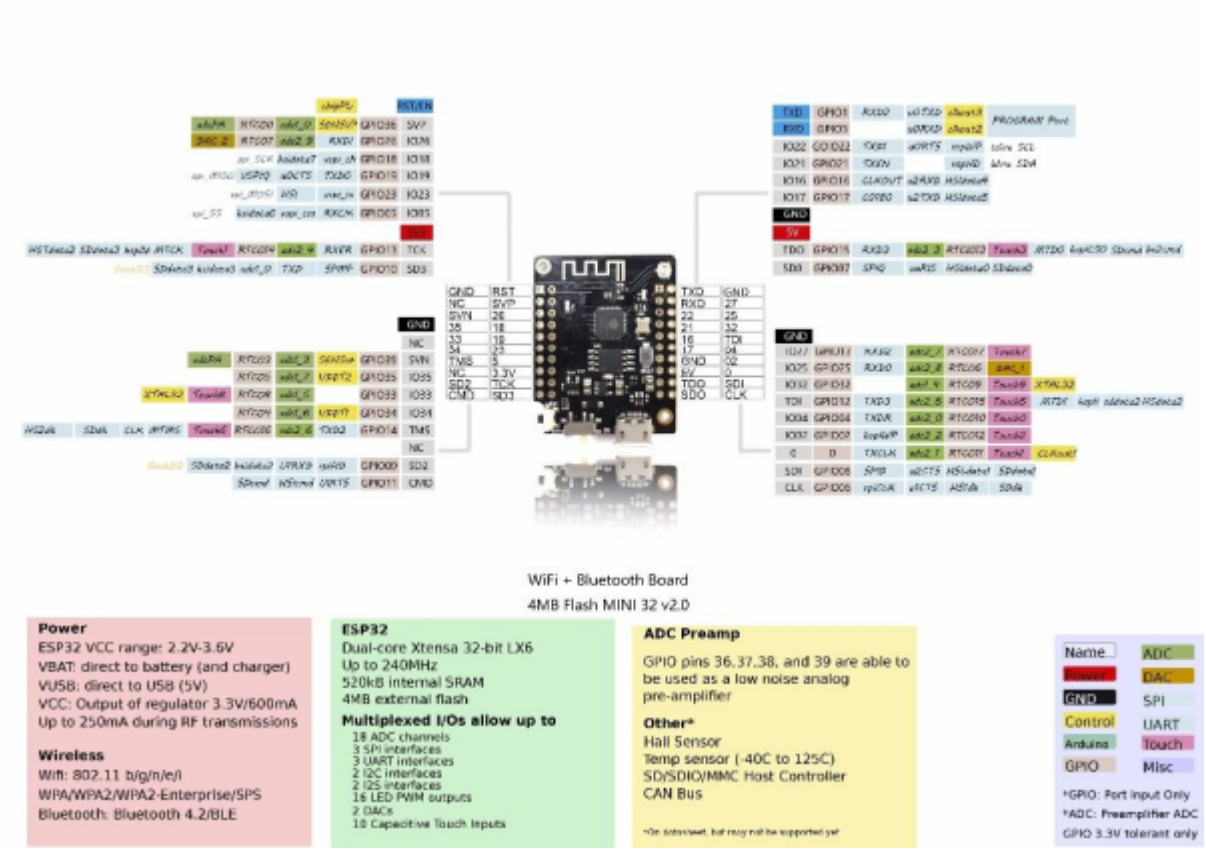

- Project issue 299: Add configurations to send data over wifi → https://github.com/cyberman54/ESP32-Paxcounter/issues/299
- Project issue 331: Running the program on a simple ESP32 board (without Lora) → https://github.com/cyberman54/ESP32-Paxcounter/issues/331
- Project issue 612: Bluetooth: observations/questions → https://github.com/cyberman54/ESP32-Paxcounter/issues/612
- Cambiar versión en platformio.ini

  #1: BLE on/off status is persisted via non volatile RAM. Initially the mode is taken from BLECOUNTER setting in paxcounter.conf. If you reflash the device after flashing it with default BLECOUNTER=0 you need to alter the BLE mode, either by rcommand, or by clearing NV RAM. Clearing NV RAM during startup can be enforced by modifying the version number. Yes, this is a crappy logic. Pull requests for improvement are welcome.

  #2 scan detection time and, thus, exploration rate, of Wifi and BLE sniffing differ. To compare exploration rates it is necessary to average samples over time. Since ESP32 has only 1 RF radio, scanning of wifi devices has a 1:13 ratio, while BLE has 1:3, so BLE packets can be faster scanned, but it depends on the device, if/when a BLE packet is sent.

  You could use the new corona warn app as a BLE packet generator.

```
[common]
; for release_version use max. 10 chars total, use any decimal format like "a.b.c"
release_version = 1.9.998
```

- https://github.com/cyberman54/ESP32-Paxcounter#sd-card

From:
https://wiki.unloquer.org/ -

Permanent link:
https://wiki.unloquer.org/personas/brolin/proyectos/contador_personas?rev=1594520852

Last update: **2020/07/12 02:27**